THIS DRAWING IS UNPUBLISHED. RELEASED FOR PUBLICATION -,- .
© COPYRIGHT - By - ALL RIGHTS RESERVED.

LOC	DIST
FT	4

REVISIONS

P	LTR	DESCRIPTION	DATE	DWN	APVD
	K2	REVISED PER ECO-11-004820	11MAR11	RK	HMR

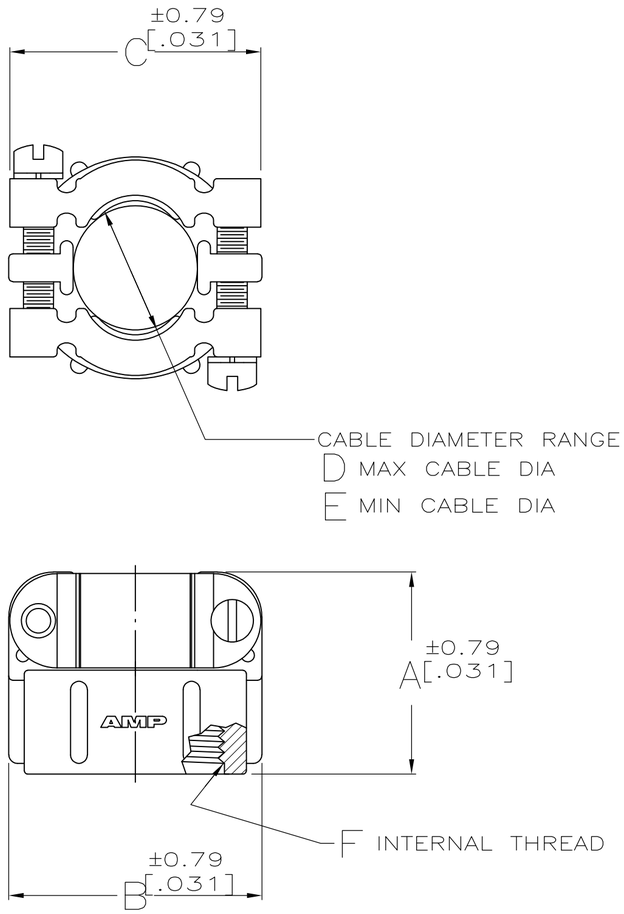

ASSEMBLED VIEW
SCALE 2:1

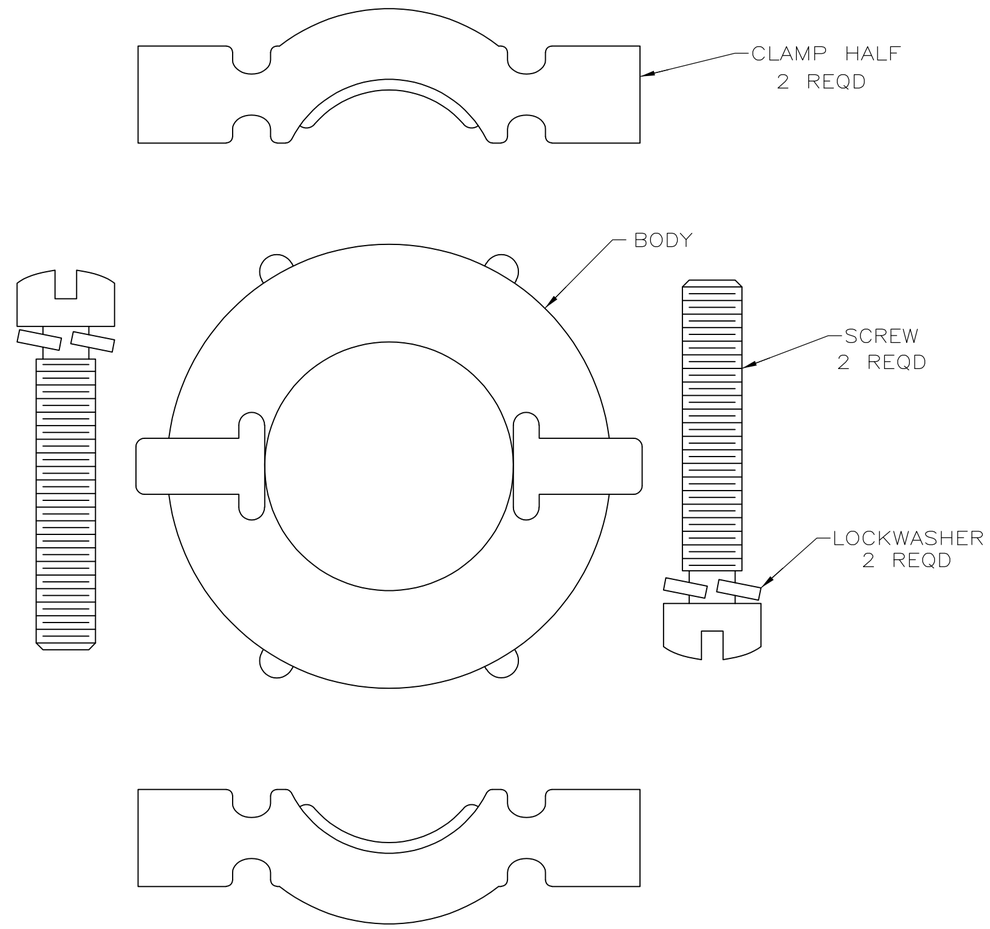

			F	E	D	C	B	A	SHELL SIZE	PART NO
4 5	OBSOLETE	1	7/16-18UNEF-3B	11.43 [.450]	17.48 [.688]	42.88 [1.688]	43.10 [1.697]	26.19 [1.031]	28	~~1 208945 0~~
5	OBSOLETE	1	7/16-18UNEF-3B	11.43 [.450]	17.48 [.688]	42.88 [1.688]	43.10 [1.697]	26.19 [1.031]	28	~~208945-9~~
		1	7/16-18UNEF-3B	11.43 [.450]	23.83 [.938]	42.88 [1.688]	43.10 [1.697]	26.19 [1.031]	28	208945-8
		1	3/16-18UNEF-3B	8.26 [.325]	19.05 [.750]	37.31 [1.469]	36.37 [1.432]	23.83 [.938]	22	208945-7
		1	7/8-20UNEF-3B	5.72 [.225]	14.27 [.562]	29.59 [1.165]	29.85 [1.175]	23.83 [.938]	14	208945-5

1. MILITARY CONNECTORS USUALLY DESIGNATE A 3/4-20 THREAD FOR SIZE 14 CONNECTORS AND A 7/8-20 THREAD FOR SIZE 16 CONNECTORS. AMP'S SIZE 14 CONNECTORS WITH A 7/8-20 THREAD IS A DEVIATION FROM THIS STANDARD.
2. BODY & CLAMPS: NICKEL PLATE.
3. BODY & CLAMPS: ZINC ALLOY. SCREWS & WASHERS: STAINLESS STEEL.
4. PACKAGED IN BULK ONLY.
5. OBSOLETE PARTS: OBSOLETE CIS STREAMLINING PER D.RENAUD/D.SINISI

THIS DRAWING IS A CONTROLLED DOCUMENT.

DIMENSIONS: mm [INCHES]

TOLERANCES UNLESS OTHERWISE SPECIFIED:
0 PLC ± -
1 PLC ± -
2 PLC ± -
3 PLC ± -
4 PLC ± -
ANGLES ± -

MATERIAL 3
FINISH 2

DWN W.G.LENKER 05/18/92
CHK R.STONE 6-1-92
APVD K.BEAVER 6-3-92
PRODUCT SPEC —
APPLICATION SPEC —
WEIGHT —

TE Connectivity

NAME CABLE CLAMP KIT, UNASSEMBLED, CMC

SIZE	CAGE CODE	DRAWING NO	RESTRICTED TO
A2	00779	C-208945	—

CUSTOMER DRAWING | SCALE 4:1 | SHEET 1 OF 1 | REV K2

208945

1471-9 (3/11)