2173234-1 ✔ ACTIVE

zQSFP+/QSFP28

TE Internal #: 2173234-1

Heat Sinks, ZQSFP+, zQSFP+/QSFP28

View on TE.com >

Connectors > Connector Accessories > Heat Sinks

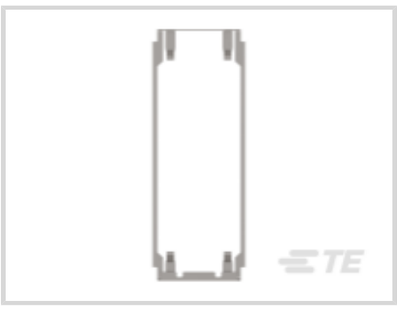

Device Type: **ZQSFP+**

Features

Product Type Features

Device Type	ZQSFP+

Body Features

Primary Product Material	Stainless Steel

Product Compliance

For compliance documentation, visit the product page on TE.com>

EU RoHS Directive 2011/65/EU	Compliant
EU ELV Directive 2000/53/EC	Compliant
China RoHS 2 Directive MIIT Order No 32, 2016	No Restricted Materials Above Threshold
EU REACH Regulation (EC) No. 1907/2006	Current ECHA Candidate List: JAN 2024 (240) Candidate List Declared Against: JAN 2024 (240) Does not contain REACH SVHC
Halogen Content	Low Halogen - Br, Cl, F, I < 900 ppm per homogenous material. Also BFR/CFR/PVC Free
Solder Process Capability	Not applicable for solder process capability

Product Compliance Disclaimer

This information is provided based on reasonable inquiry of our suppliers and represents our current actual knowledge based on the information they provided. This information is subject to change. The part numbers that TE has identified as

EU RoHS compliant have a maximum concentration of 0.1% by weight in homogenous materials for lead, hexavalent chromium, mercury, PBB, PBDE, DBP, BBP, DEHP, DIBP, and 0.01% for cadmium, or qualify for an exemption to these limits as defined in the Annexes of Directive 2011/65/EU (RoHS2). Finished electrical and electronic equipment products will be CE marked as required by Directive 2011/65/EU. Components may not be CE marked. Additionally, the part numbers that TE has identified as EU ELV compliant have a maximum concentration of 0.1% by weight in homogenous materials for lead, hexavalent chromium, and mercury, and 0.01% for cadmium, or qualify for an exemption to these limits as defined in the Annexes of Directive 2000/53/EC (ELV). Regarding the REACH Regulation, the information TE provides on SVHC in articles for this part number is based on the latest European Chemicals Agency (ECHA) 'Guidance on requirements for substances in articles' posted at this URL: https://echa.europa.eu/guidance-documents/guidance-on-reach

Compatible Parts

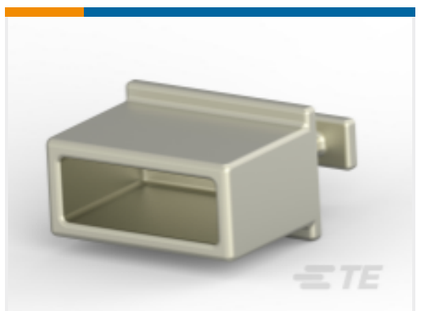

TE Part # 1888810-2
EMI/Dust Cover,XFP And QSFP

TE Part # 1551920-2
zQSFP+ connector assembly

Also in the Series | zQSFP+/QSFP28

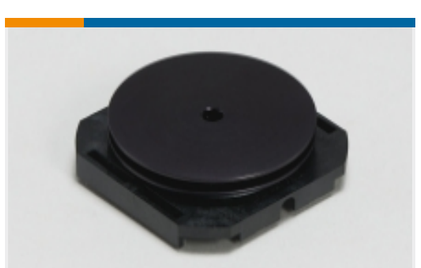

Heat Sinks(7)

Pluggable I/O Cable Assemblies(81)

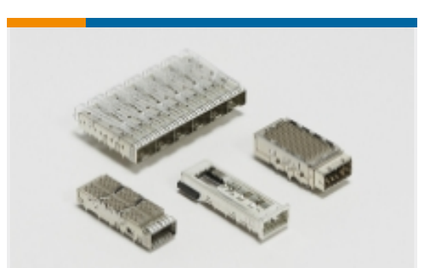

Pluggable IO Connectors & Cages(425)

Customers Also Bought

TE Part # 2176058-8
RLP73V 3A R020 5% 2K RL

TE Part # 650934-5
064 EURO TYPE R PIN ST ASSY

TE Part # 6368062-4
2X4 OFFSET STK MJ,SHLD,G/Y LED&GND

TE Part # 3-1879125-9
RN 0402 68R1 0.1% 10PPM 5K RL

TE Part # 5338108-9
Z-PACK SHLD.LOWER A

TE Part # 8-2176369-3
RQ 0603 287R 0.1% 10PPM 5K RL

TE Part # 6368062-8
2X4 OFFSET STK MJ,SHLD,W/LED

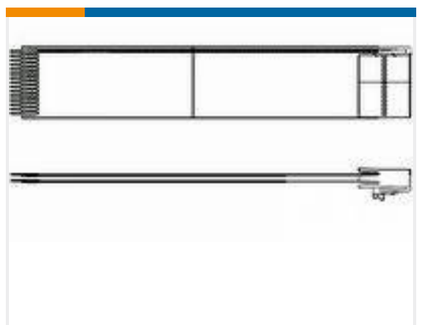

TE Part # 1370495-1
.050 CL FFC,30P DBL CABLE ASSY

Documents

Product Drawings

Heat Sink Clip zQSFP+

English

CAD Files

3D PDF

3D

Customer View Model

ENG_CVM_CVM_2173234-1_A.2d_dxf.zip

English

Customer View Model

ENG_CVM_CVM_2173234-1_A.3d_igs.zip

English

Customer View Model

ENG_CVM_CVM_2173234-1_A.3d_stp.zip

English

By downloading the CAD file I accept and agree to the Terms and Conditionsof use.

Product Specifications

Application Specification

English

Terminating AMP MTEI Connector

English

Application Specification

English