THIS DRAWING IS UNPUBLISHED. RELEASED FOR PUBLICATION 20
© COPYRIGHT 20 BY - ALL RIGHTS RESERVED.

REVISIONS

P	LTR	DESCRIPTION	DATE	DWN	APVD
	A	INITIAL RELEASE	10JUL2018	AD	SH

△1 MATERIAL: ALUMINUM ALLOY;

△2. FINISH: ELECTROLESS NICKEL;

△3 FINISH: ANODIZED BLACK;

4.0.2mm MAX BURR PERMISSIBLE

5.VARIATION IN PLATING COLOR IS NORMAL AND ALLOWED

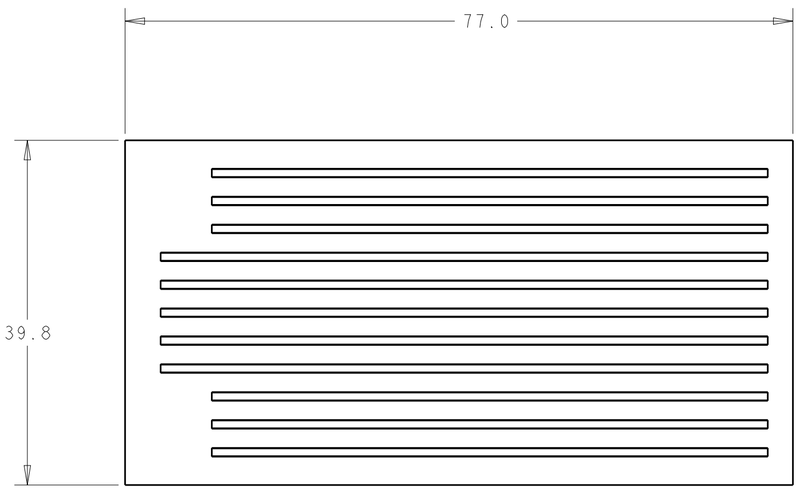

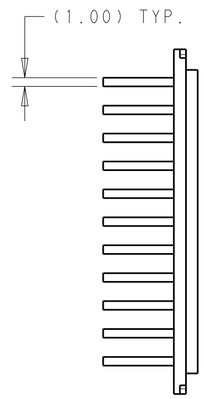

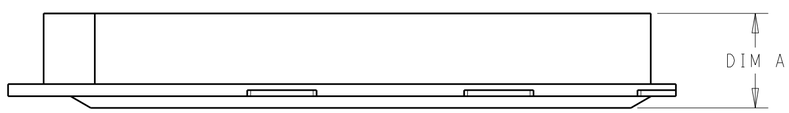

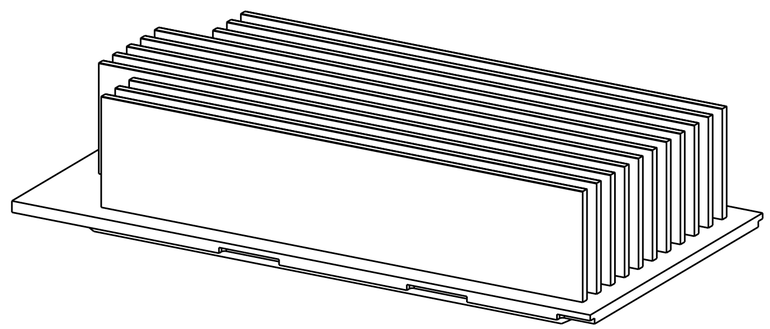

2288218-6 AS SHOWN
SCALE 2:1

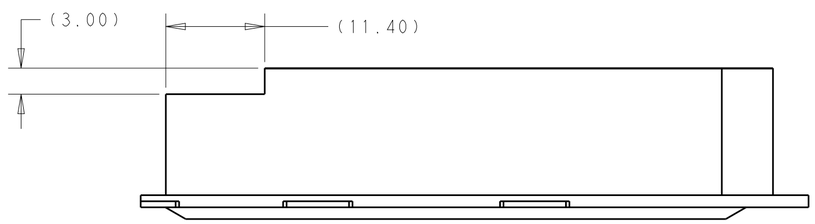

2288218-8 AS SHOWN
UNSPECIFIED DIMENSION SAME AS 2288218-1

DIM. A	FINISH	PART NUMBER
17.4	△3	2288218-8
16.35	△3	2288218-6
10.9	△3	2288218-3

THIS DRAWING IS A CONTROLLED DOCUMENT.

DIMENSIONS: mm

TOLERANCES UNLESS OTHERWISE SPECIFIED:
0 PLC ±-
1 PLC ±0.3
2 PLC ±0.25
3 PLC ±-
4 PLC ±-
ANGLES ±-

MATERIAL -
FINISH -

DWN ANDY XIE 11OCT2016
CHK SEAN HAN 11OCT2016
APVD SEAN HAN 11OCT2016
PRODUCT SPEC -
APPLICATION SPEC -
WEIGHT -

TE Connectivity

NAME CFP2 HEAT SINK

SIZE A2 | CAGE CODE - | DRAWING NO C-2288218 | RESTRICTED TO -

CUSTOMER DRAWING | SCALE 1:1 | SHEET 1 OF 1 | REV A

1471-9 (3/13)