C AJS-107PP

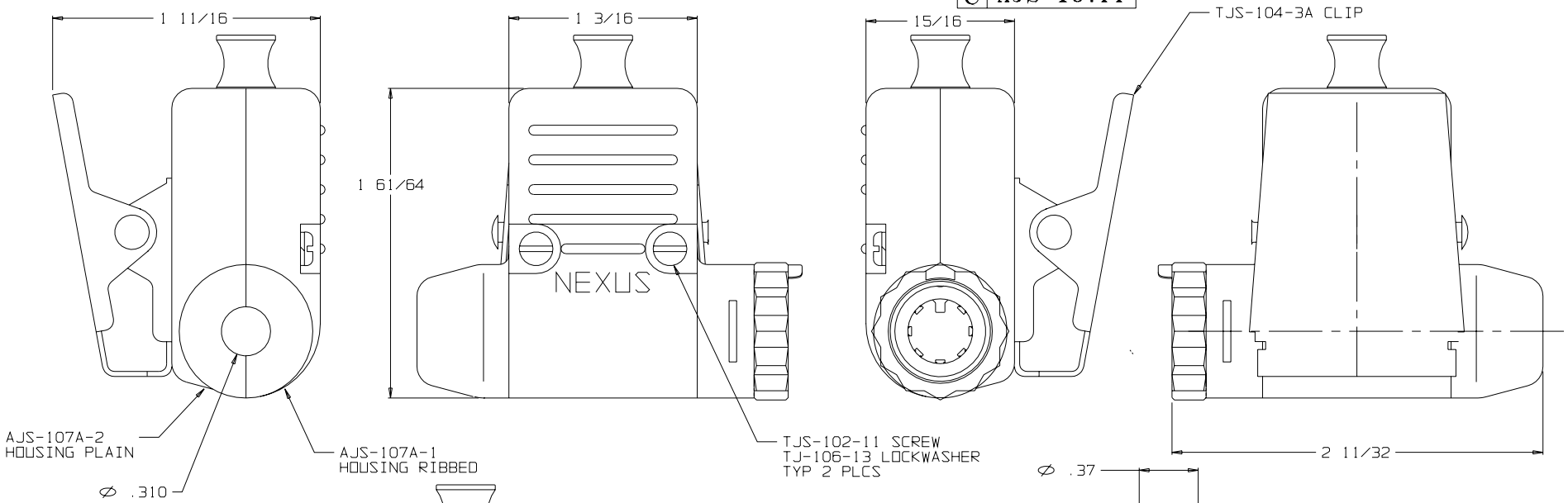

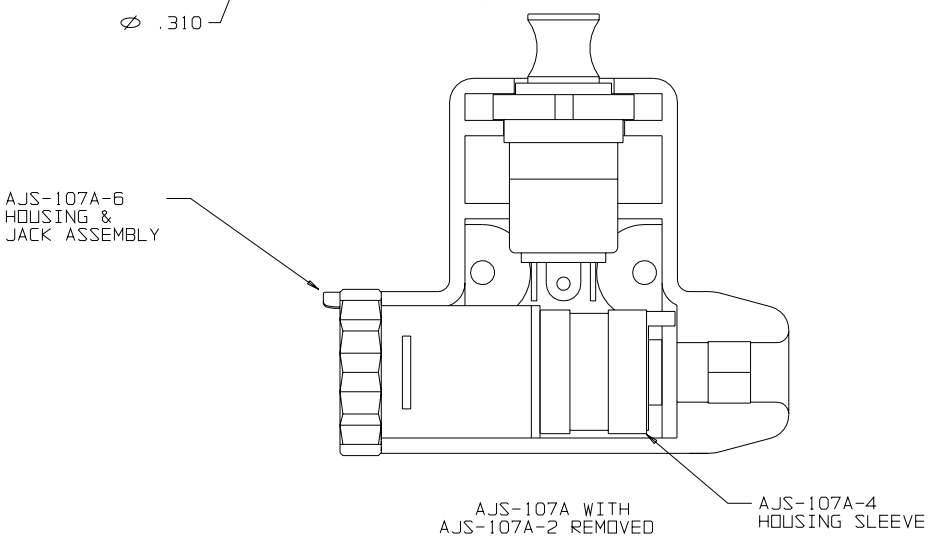

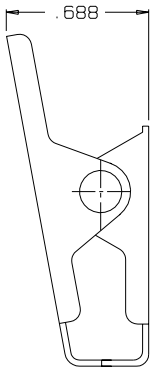

CLIP ASSY
TJS-104-3A
(1 REQ'D)

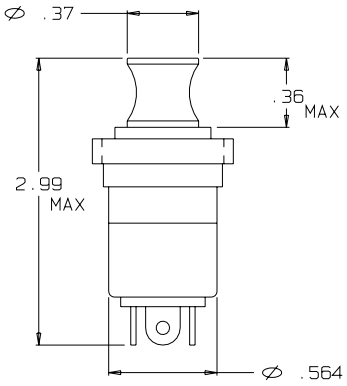

SWITCH
SPDT
NX303BB3B
(1 REQ'D)

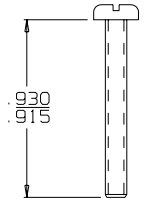

SCREW 4-40 UNC 2A
TJS-102-11
(2 REQ'D)

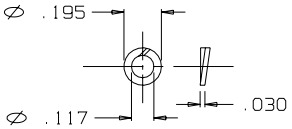

WASHER, LOCK #4
TJ-106-13
(2 REQ'D)

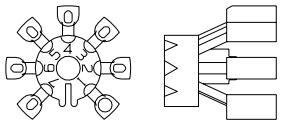

CABLE HOLDER
AJ-107-3AS-1N
(1 REQ'D)

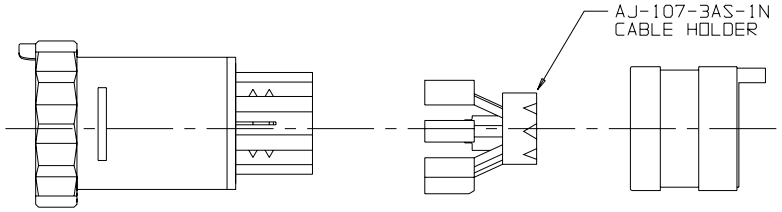

HOUSING & JACK ASSEMBLY
AJS-107A-6
(1 REQ'D)

MODIFIED SLEEVE
AJS-107A-4
(1 REQ'D)

MATION OF NEXUS, INCORPORATED AND SUCH INFORMATION MAY NOT BE DISCLOSED TO OTHERS FOR ANY PURPOSE OR USED FOR ANY PURPOSE WITHOUT THE WRITTEN CONSENT OF NEXUS.

LET.	REVISION	CN #	DATE	CHK.
B	CORRECTED TITLE WAS NX307		9/7/07	EWT
A	INITIAL RELESE		2/9/04	EWT

DWN. BY EWT	DATE 2/9/04	MATERIAL	
CHECKED BY	DATE	FINISH	
APPR. BY	DATE	WEIGHT	SCALE 2:1

UNLESS OTHERWISE SPECIFIED DIMENSIONS ARE IN INCHES TOLERANCES ON FRACTIONS DECIMALS ANGLES +/- 1/64 +/-.005 —

TITLE JACK-TELEPHONE (7) CONDUCTOR WITH B NX303 PUSH-PULL SWITCH

DO NOT SCALE DWG. SHEET 1 OF 1

NEXUS
STAMFORD, CONN

SIZE C DWG. NO. AJS-107PP