THIS DRAWING IS UNPUBLISHED. RELEASED FOR PUBLICATION - ,- .
© COPYRIGHT - BY TYCO ELECTRONICS CORPORATION. ALL INTERNATIONAL RIGHTS RESERVED.

| LOC | DIST |
|---|---|
| — | — |

REVISIONS

| P | LTR | DESCRIPTION | DATE | DWN | APVD |
|---|---|---|---|---|---|
| | A1 | REVISED PER ECO-10-014168 | 02AUG10 | HMR | MW |

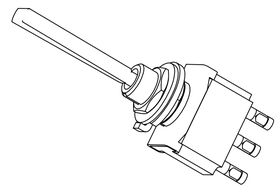

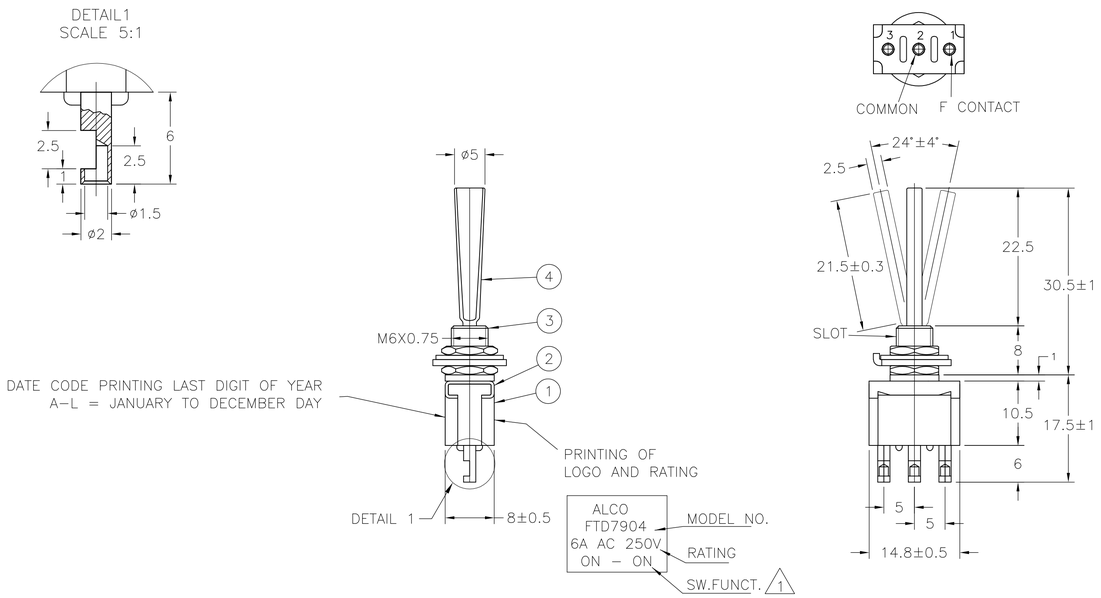


FUNCTION CHART

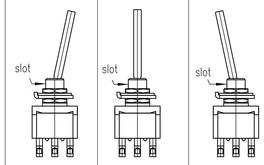


| TE PN | PART | TERMINALS 2 AND 3 | | TERMINALS 1 AND 2 |
|---|---|---|---|---|
| 5-6437630-3 | FTD7904 | ON | NONE | ON |
| 5-6437630-4 | FTD79G04 | ON | NONE | ON |
| 5-6437630-8 | FTE79G04 | ON | OFF | ON |

(ON): MOMENTARY ACTION
OFF: MECHANICAL POSITION WITHOUT ELECTRICAL CONNECTION
NONE: NO MECHANICAL POSITION

1. 0.5VA NO SWITCH FUNCTION WILL BE MARKED BUT WILL BE MARKED GOLD CON.
2. OPERATING TEMPERATURE –20~C TO +70~C
3. ALL MATERIALS AND FINISHES COMPLY WITH ROHS DIRECTIVE

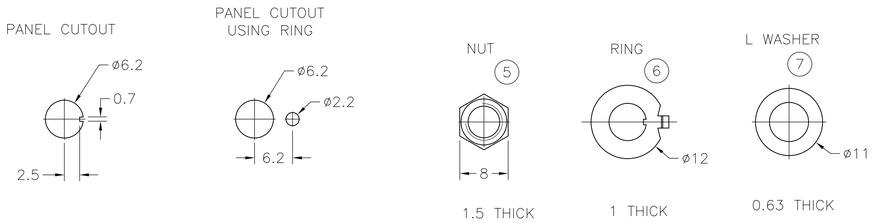


| | | | | | | | | |
|---|---|---|---|---|---|---|---|---|
| 5-6437630-4<br>5-6437630-8 | FTD79G04<br>FTE79G04 | C3602BD<br>Ep-Cu/Ni3,Au1b | C3602BD<br>Ep-Cu/Ni3,Au1b | 20V AC/DC<br>0.4VA MAX | MAX 10 MILLIOHMS<br>AT DC 2 ~ 4V 0.1A | MIN<br>1000 M Ohms<br>AT DC 500V | AC 1KV/1min<br>(AC 1.2KV/1sec) | ELECTRICALLY 50,000 CYCLES AT 20 CYCLES/MIN<br>(RATED LOAD RESISTIVE)<br>MECHANICALLY<br>100,000 CYCLES AT 20 CYCLES/MIN |
| 5-6437630-3 | FTD7904 | 99,8% Silver<br>+ C3602BD<br>Ep-Cu/Ni3,AuFb | C3602BD<br>Ep-Cu/Ni3,AuFb | AC 125V 6A<br>AC 250V 6A | MAX 10 MILLIOHMS<br>AT DC 2 ~ 4V 1A | | | |
| TE PN | PART | F CONTACT | COMMON | RATING | INITIAL<br>CONTACT RESISTANCE | INSULATION<br>RESISTANCE | DIELECTRIC<br>STRENGTH | ENDURANCE |
| | | CONTACT MATERIAL | | SPECIFICATIONS | | | | |

MATERIALS CHART

| | | | |
|---|---|---|---|
| Ep-Fe/Cu2,Ni4b | SK-5 | L WASHER | 7 |
| Ep-Fe/Cu2,Ni3b | SPCC | RING | 6 |
| Ep-Cu/Ni3b | C3602BD | NUT | 5 |
| Ep-Cu/Ni3,Cr1b | C3602BD | ACTUATOR | 4 |
| Ep-Cu/Ni3b | C3602BD | BUSHING | 3 |
| | SUS | FRAME | 2 |
| | POLYESTER RESIN | CASE | 1 |
| OPTIONAL DESCRIPTION | MATERIAL/SURFACE | PART NAME | PART NO |

PART LIST

THIS DRAWING IS A CONTROLLED DOCUMENT.

DIMENSIONS: mm

TOLERANCES UNLESS OTHERWISE SPECIFIED:
0 PLC ± –
1 PLC ± –
2 PLC ± –
3 PLC ± –
4 PLC ± –
ANGLES ± –

MATERIAL –
FINISH –

DWN RAGHAVENDRA 02AUG10
CHK MICHAEL WILBOURN 02AUG10
APVD MICHAEL WILBOURN 02AUG10
PRODUCT SPEC —
APPLICATION SPEC —
WEIGHT —

Tyco Electronics
Tyco Electronics Corporation
Harrisburg, PA 17105-3608

NAME Toggle Switch Single Pole SP LONG LEVER

| SIZE | CAGE CODE | DRAWING NO | RESTRICTED TO |
|---|---|---|---|
| A1 | 00779 | C-1968514 | — |

CUSTOMER DRAWING | SCALE 1:1 | SHEET 1 OF 1 | REV A1

4805 (1/08)