CRYSTAL OSCILLATOR (Programmable)
SPREAD SPECTRUM
OUTPUT: CMOS

SG-9101 series

Product Number
SG-9101CA: X1G005301xxxx00
SG-9101CB: X1G005311xxxx00
SG-9101CE: X1G005321xxxx00
SG-9101CG: X1G005291xxxx00

- Frequency range : 0.67 MHz to 170 MHz (1 ppm Step)
- Supply voltage : 1.62 V to 3.63 V
- Function : Output enable (OE) or Standby ($\overline{ST}$)
- Configurable spread spectrum settings:
  2 kinds of spread type, 6 kinds of spread width
  4 kinds of modulation frequency, 3 kinds of spread profile
- PLL technology to enable short lead time
- Available field oscillator programmer "SG-Writer II"

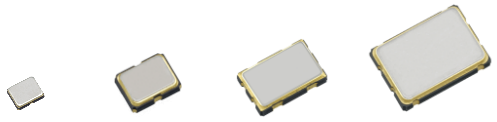

CG 2.5 × 2.0 mm | CE 3.2 × 2.5 mm | CB 5.0 × 3.2 mm | CA 7.0 × 5.0 mm

Specifications (characteristics)

Item	Symbol	Specifications				Conditions/Remarks	
Supply voltage	V_{CC}	1.80 V Typ.		2.50 V Typ.	3.30 V Typ.	-	
		1.62 V to 1.98 V	1.98 V to 2.20 V	2.20 V to 2.80 V	2.70 V to 3.63 V		
Output frequency range	f_O	0.67 MHz to 170 MHz					
Storage temperature	T_stg	-40 °C to +125 °C				Storage as single product.	
Operating temperature	T_use	-40 °C to +85 °C					
		-40 °C to +105 °C					
Frequency tolerance*1	f_tol	±50 × 10^{-6}				Average frequency of 1s gate time.	
Current consumption	I_{CC}	3.4 mA Max.	3.5 mA Max.	3.6 mA Max.	3.7 mA Max.	T_use = +105 °C	No load, f_O = 20 MHz
		2.9 mA Typ.		3.0 mA Typ.	3.2 mA Typ.	T_use = +25 °C	
		5.7 mA Max.	6.0 mA Max.	6.9 mA Max.	8.3 mA Max.	T_use = +105 °C	No load, f_O = 170 MHz
		4.9 mA Typ.		5.9 mA Typ.	7.0 mA Typ.	T_use = +25 °C	
Output disable current	I_dis	3.4 mA Max.	3.4 mA Max.	3.5 mA Max.	3.7 mA Max.	OE = GND, f_O = 170 MHz	
Standby current	I_std	0.9 μA Max.	1.0 μA Max.	1.5 μA Max.	2.5 μA Max.	T_use = +105 °C	$\overline{ST}$ = GND
		0.3 μA Typ.	0.4 μA Typ.	0.5 μA Typ.	1.1 μA Typ.	T_use = +25 °C	
Symmetry	SYM	45 % to 55 %				50 % V_{CC} Level	
Output voltage (DC characteristics)	V_{OH}	90 % V_{CC} Min.				I_{OH}/I_{OL} Conditions [mA]	
	V_{OL}	10 % V_{CC} Max.					

Rise/Fall time	Vcc	*A	*B	*C	*D
Default (f_O > 40 MHz), Fast	I_{OH}	-2.5	-3.5	-4.0	-5.0
	I_{OL}	2.5	3.5	4.0	5.0
Default (f_O ≤ 40 MHz)	I_{OH}	-1.5	-2.0	-2.5	-3.0
	I_{OL}	1.5	2.0	2.5	3.0
Slow	I_{OH}	-1.0	-1.5	-2.0	-2.5
	I_{OL}	1.0	1.5	2.0	2.5

*A : 1.62 V to 1.98 V, *B : 1.98 V to 2.20 V,
*C : 2.20 V to 2.80 V, *D : 2.70 V to 3.63 V

Item	Symbol	Specifications	Conditions/Remarks	
Output load condition	L_CMOS	15 pF Max.	-	
Input voltage	V_{IH}	70 % V_{CC} Min.	OE or $\overline{ST}$	
	V_{IL}	30 % V_{CC} Max.		
Rise time /Fall time — Default	tr/tf	3.0 ns Max.	f_O > 40 MHz	20 % - 80 % V_{CC}, L_CMOS = 15 pF
		6.0 ns Max.	f_O ≤ 40 MHz	
Rise time /Fall time — Fast		3.0 ns Max.	f_O = 0.67 MHz to 170 MHz	
Rise time /Fall time — Slow		10.0 ns Max.	f_O = 0.67 MHz to 20 MHz	
Output disable time (OE) Output disable time (ST)	tstp_oe tstp_st	1 μs Max.	Measured from the time OE or $\overline{ST}$ pin crosses 30 % V_{CC}	
Output enable time (OE)	tsta_oe	1 μs Max.	Measured from the time OE pin crosses 70 % V_{CC}	
Output enable time (ST)	tsta_st	3 ms Max.	Measured from the time $\overline{ST}$ pin crosses 70 % V_{CC}	
Start-up time	t_str	3 ms Max.	Measured from the time V_{CC} reaches its rated minimum value, 1.62 V	
Frequency aging	f_age	This is included in frequency tolerance specification.	+25 °C, first year	

*1 Frequency tolerance includes initial frequency tolerance, frequency / temperature characteristics, frequency / voltage coefficient, frequency / load coefficient and frequency aging (+25 °C, 1 year).

Pin description

Pin	Name	I/O type	Function	
1	OE	Input	Output enable	High*2: Specified frequency output from OUT pin
				Low: Out pin is low (weak pull down), only output driver is disabled.
	$\overline{ST}$	Input	Standby	High*2: Specified frequency output from OUT pin
				Low: Out pin is low (weak pull down), Device goes to standby mode. Supply current reduces to the least as I_std.
2	GND	Power	Ground	
3	OUT	Output	Clock output	
4	V_{CC}	Power	Power supply	

*2 Please do not use the OE/$\overline{ST}$ terminal in the open state.

Product Name

SG-9101CG 170.000000MHz C 20 P H A A A
① ② ③ ④ ⑤ ⑥ ⑦ ⑧ ⑨ ⑩

①Model ②Package type ③Frequency
④Spread type ⑤Spread width
⑥Function ⑦Operating temperature
⑧Modulation frequency ⑨Spread profile
⑩Rise/Fall time

②Package type	
CG	2.5 mm × 2.0 mm
CE	3.2 mm × 2.5 mm
CB	5.0 mm × 3.2 mm
CA	7.0 mm × 5.0 mm

④Spread type	
C	Center spread
D	Down spread

⑤Spread width		
	Center spread	Down spread
02	±0.25 %	
05	±0.5 %	-0.5 %
07	±0.75 %	
10	±1.0 %	-1.0 %
15	±1.5 %	-1.5 %
20	±2.0 %	-2.0 %
30		-3.0 %
40		-4.0 %

⑥Function	
P	Output enable
S	Standby

⑦Operating temperature	
G	-40 °C to +85 °C
H	-40 °C to +105 °C

⑧Modulation frequency	
A	25.4 kHz (Default)
B	12.7 kHz
C	8.5 kHz
D	6.3 kHz

⑨Spread profile	
A	Hershey-kiss (Default)
B	Sine-wave
C	Triangle

⑩Rise/Fall time	
A	Default
B	Fast
C	Slow

External dimensions (Unit: mm)

SG-9101CG

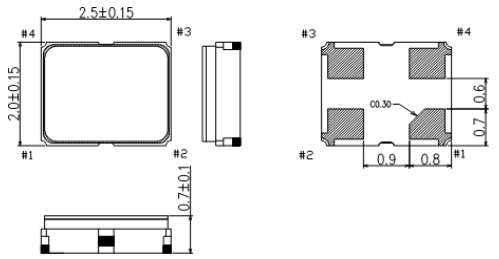

SG-9101CE

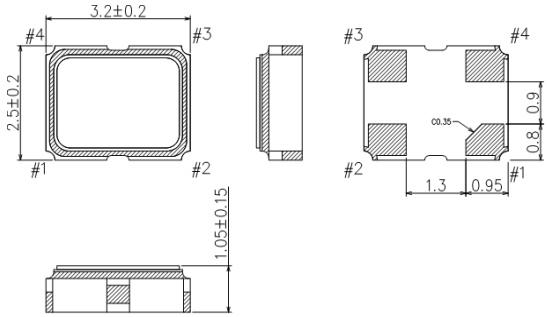

SG-9101CB

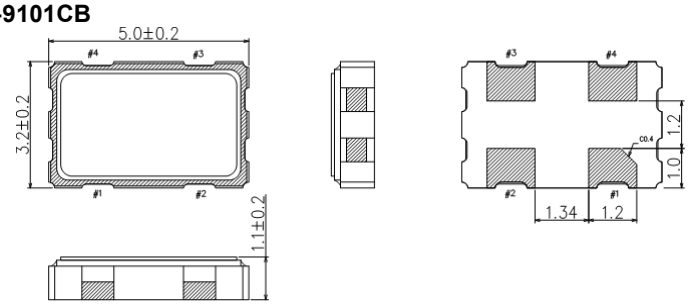

SG-9101CA

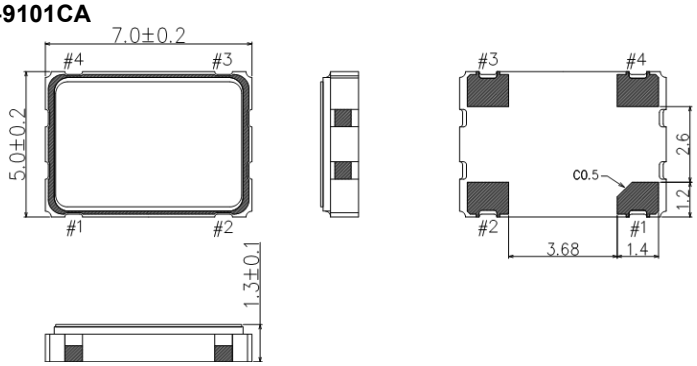

Footprint (Recommended) (Unit: mm)

SG-9101CG

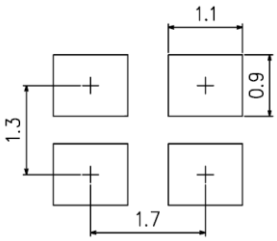

SG-9101CE

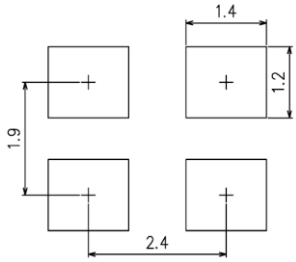

SG-9101CB

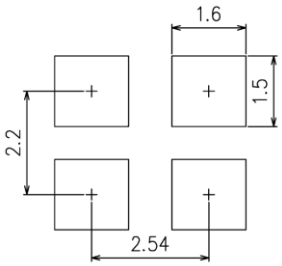

SG-9101CA

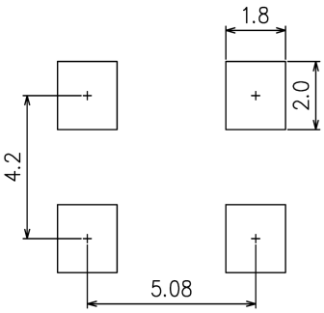

■Notes:
In order to achieve optimum jitter performance, the 0.1 μF capacitor between V_{CC} and GND should be placed. It is also recommended that the capacitors are placed on the device side of the PCB, as close to the device as possible and connected together with short wiring pattern.

PROMOTION OF ENVIRONMENTAL MANAGEMENT SYSTEM CONFORMING TO INTERNATIONAL STANDARDS

At Seiko Epson, all environmental initiatives operate under the Plan-Do-Check-Action (PDCA) cycle designed to achieve continuous improvements. The environmental management system (EMS) operates under the ISO 14001 environmental management standard.

All of our major manufacturing and non-manufacturing sites, in Japan and overseas, completed the acquisition of ISO 14001 certification.

ISO 14000 is an international standard for environmental management that was established by the International Standards Organization in 1996 against the background of growing concern regarding global warming, destruction of the ozone layer, and global deforestation.

WORKING FOR HIGH QUALITY

In order provide high quality and reliable products and services than meet customer needs, Seiko Epson made early efforts towards obtaining ISO9000 series certification and has acquired ISO9001 for all business establishments in Japan and abroad. We have also acquired IATF 16949 certification that is requested strongly by major automotive manufacturers as standard.

IATF 16949 is the international standard that added the sector-specific supplemental requirements for automotive industry based on ISO9001.

►Explanation of the mark that are using it for the catalog

Pb Free	►Pb free.
RoHS Compliant	►Complies with EU RoHS directive. *About the products without the Pb-free mark. Contains Pb in products exempted by EU RoHS directive. (Contains Pb in sealing glass, high melting temperature type solder or other.)
For Automotive	►Designed for automotive applications such as Car Multimedia, Body Electronics, Remote Keyless Entry etc.
Automotive Safety	►Designed for automotive applications related to driving safety (Engine Control Unit, Air Bag, ESC etc).

NOTICE：PLEASE READ CAREFULLY BELOW BEFORE THE USE OF THIS DOCUMENT ©Seiko Epson Corporation 2020

1. The content of this document is subject to change without notice. Before purchasing or using Epson products, please contact with sales representative of Seiko Epson Corporation (“Epson”) for the latest information and be always sure to check the latest information published on Epson’s official web sites and resources.
2. This document may not be copied, reproduced, or used for any other purposes, in whole or in part, without Epson’s prior consent.
3. Information provided in this document including, but not limited to application circuits, programs and usage, is for reference purpose only. Epson makes no guarantees against any infringements or damages to any third parties’ intellectual property rights or any other rights resulting from the information. This document does not grant you any licenses, any intellectual property rights or any other rights with respect to Epson products owned by Epson or any third parties.
4. Using Epson products, you shall be responsible for safe design in your products; that is, your hardware, software, and/or systems shall be designed enough to prevent any critical harm or damages to life, health or property, even if any malfunction or failure might be caused by Epson products. In designing your products with Epson products, please be sure to check and comply with the latest information regarding Epson products (including, but not limited to this document, specifications, data sheets, manuals, and Epson’s web site). Using technical contents such as product data, graphic and chart, and technical information, including programs, algorithms and application circuit examples under this document, you shall evaluate your products thoroughly both in stand-alone basis and within your overall systems. You shall be solely responsible for deciding whether to adopt/use Epson products with your products.
5. Epson has prepared this document carefully to be accurate and dependable, but Epson does not guarantee that the information is always accurate and complete. Epson assumes no responsibility for any damages you incurred due to any misinformation in this document.
6. No dismantling, analysis, reverse engineering, modification, alteration, adaptation, reproduction, etc., of Epson products is allowed.
7. Epson products have been designed, developed and manufactured to be used in general electronic applications and specifically designated applications (“Anticipated Purpose”). Epson products are NOT intended for any use beyond the Anticipated Purpose that requires particular quality or extremely high reliability in order to refrain from causing any malfunction or failure leading to critical harm to life and health, serious property damage, or severe impact on society, including, but not limited to listed below (“Specific Purpose”). Therefore, you are strongly advised to use Epson products only for the Anticipated Purpose. Should you desire to purchase and use Epson products for Specific Purpose, Epson makes no warranty and disclaims with respect to Epson products, whether express or implied, including without limitation any implied warranty of merchantability or fitness for any Specific Purpose. Please be sure to contact our sales representative in advance, if you desire Epson products for Specific Purpose:
   Space equipment (artificial satellites, rockets, etc.)/ Transportation vehicles and their control equipment (automobiles, aircraft, trains, ships, etc.) / Medical equipment/ Relay equipment to be placed on sea floor/ Power station control equipment / Disaster or crime prevention equipment/Traffic control equipment/ Financial equipment
   Other applications requiring similar levels of reliability as the above
8. Epson products listed in this document and our associated technologies shall not be used in any equipment or systems that laws and regulations in Japan or any other countries prohibit to manufacture, use or sell. Furthermore, Epson products and our associated technologies shall not be used for the purposes of military weapons development (e.g. mass destruction weapons), military use, or any other military applications. If exporting Epson products or our associated technologies, please be sure to comply with the Foreign Exchange and Foreign Trade Control Act in Japan, Export Administration Regulations in the U.S.A (EAR) and other export-related laws and regulations in Japan and any other countries and to follow their required procedures.
9. Epson assumes no responsibility for any damages (whether direct or indirect) caused by or in relation with your non-compliance with the terms and conditions in this document or for any damages (whether direct or indirect) incurred by any third party that you give, transfer or assign Epson products.
10. For more details or other concerns about this document, please contact our sales representative.
11. Company names and product names listed in this document are trademarks or registered trademarks of their respective companies.