SIGN	DATE	DESCRIPTION	APPROVER
1	2/06'06	Part No. changed	Tony
2	3/10'09	Structure changed	Seamus
3	3/10'09	Dimension changed	Seamus
4	11/05'12	Change the screw plating specification	Jacky
5	11/05'12	Change the dimensional tolerance	Jacky

THIS IS CAD DRAWING, DO NOT REVISE MANUALLY!!!

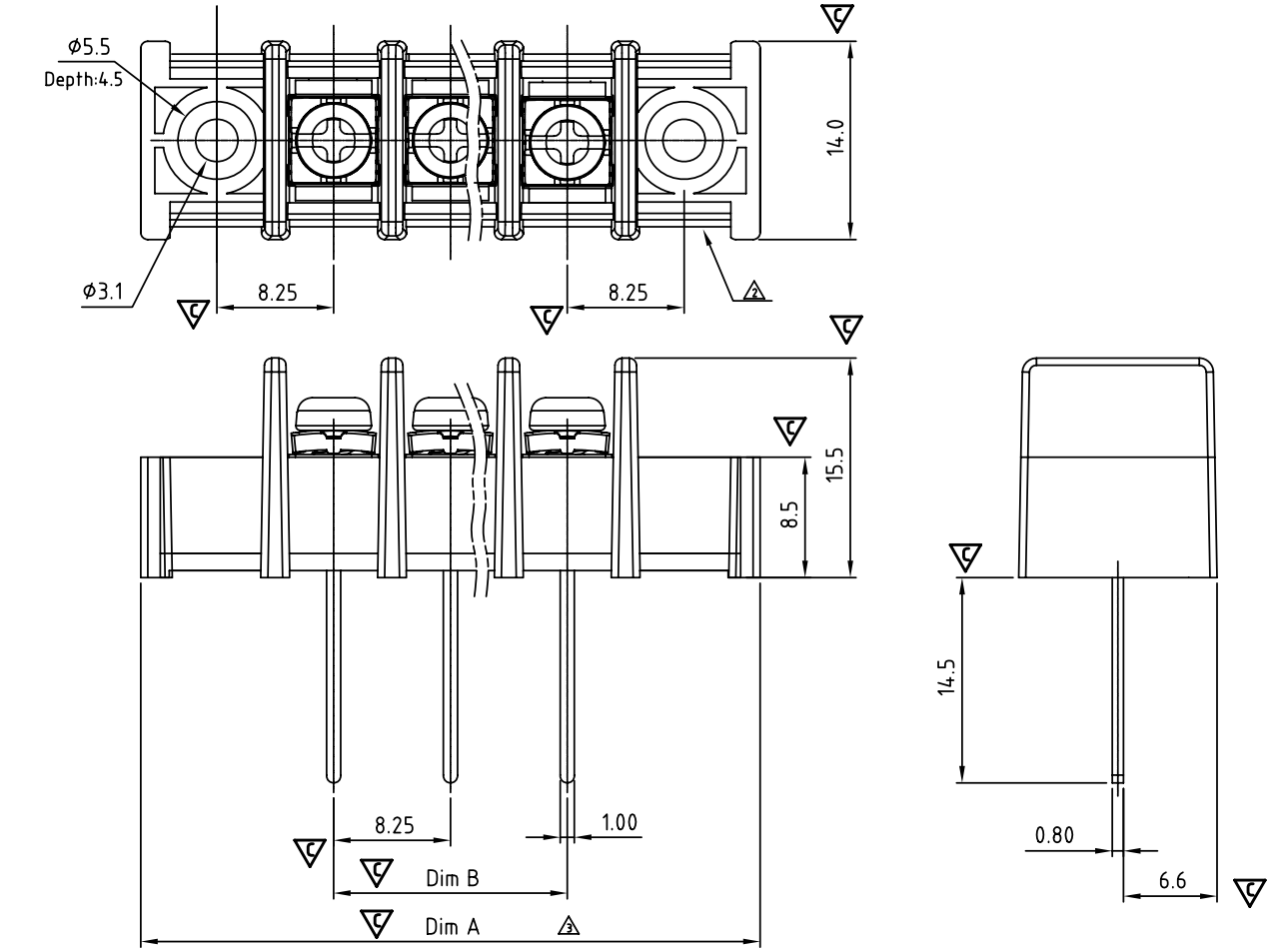

MATERIALS ELECTRICAL

RATED VOLTAGE & CURRENT:	300 V, 20 A
WITHSTAND VOLTAGE:	AC 2000 V/Min
INSULATION RESISTANCE:	1000 MΩ OR MORE AT DC 500 V
OPERATING TEMPERATURE RANG:	-40 °C ~ +115 °C
SCREW TORQUE VALUE:	8.8 Lb-In.
WIRE RANGE:	22 - 12 AWG
1) MOLDED PARTS:	THERMOPLASTIC UL 94 V-0 BLACK
2) TERMINAL:	BRASS, 0.8t, Tin PLATED
4 3) TERMINAL SCREWS:	STEEL, M3
APPROVAL:	cULus

Critical dimension: ⊕

1 PART NO.:

YK 415 xx 3 x x 00G

- G: RoHS compliant (lead<4%) In copper Alloy
- MARK
  - 0: "@" MARK
  - 1: "ANY" MARK
- TERMINAL & SCREW PLATED
  - 0: TERMINAL & SCREW: G/F
  - 4 1: TERMINAL: G/F, SCREW: Zinc
  - 2: TERMINAL: Sn, SCREW: G/F
  - 4 3: TERMINAL: Sn, SCREW: Zinc
- NO. OF POLES
  - 02: 2 POLES
  - 03: 3 POLES
  - 04: 4 POLES
  - ⋮
  - 30: 30 POLES

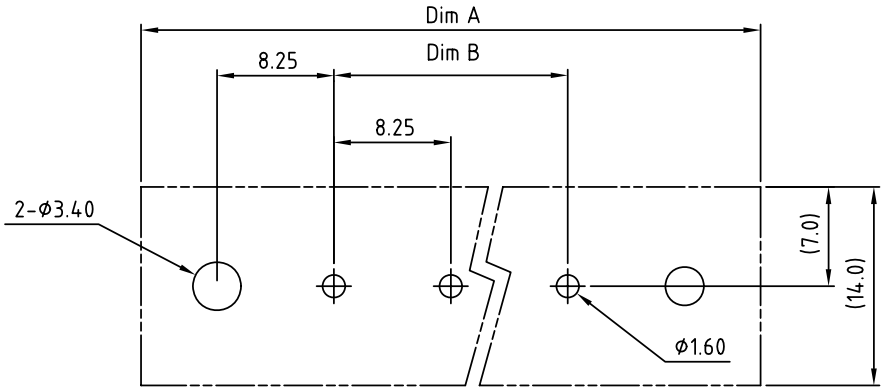

P.C.B LAYOUT(Top View)

N=Number of poles

Dimension A&B

DIM A	(N+2)×8.25+2.5
DIM B	(N-1)×8.25

5

Poles	Tolerance
2p-5p	+0.25/-0.25
6p-10p	+0.35/-0.35
11p-18p	+0.40/-0.40
19p-30p	+0.50/-0.50

ANYTEK

CUSTOMER COPY

ALL RIGHTS RESERVED. REPRODUCTION OR ISSUE TO THIRD PARTIES IN ANY FORM WHATEVER IS NOT PERMITTED WITHOUT WRITTEN AUTHORITY FROM THE PROPRIETOR. PROPERTY OF ANYTEK TECHNOLOGY CO., LTD

TITLE	YK-415 With Flange Series				
PART NO.	YK415xx3xx00G			DWG NO.	8YK0001-415
APPROVED	CHECKED	DESIGNED	DRAWN	CUST NO.	
		Jacky 2012.11.05	Jacky 2012.11.05	UNIT: mm	
				SCALE: NONE	
				SHEET: 01/01	REV.: E

Tolerance	
X.	±0.50
X.X	±0.30
X.XX	±0.10
X°	±1°